Ship loose items:
NONE

*NOTE: NOZ. S6, S7 &N8b TO BE SUPPLIED BY CUSTOMER.

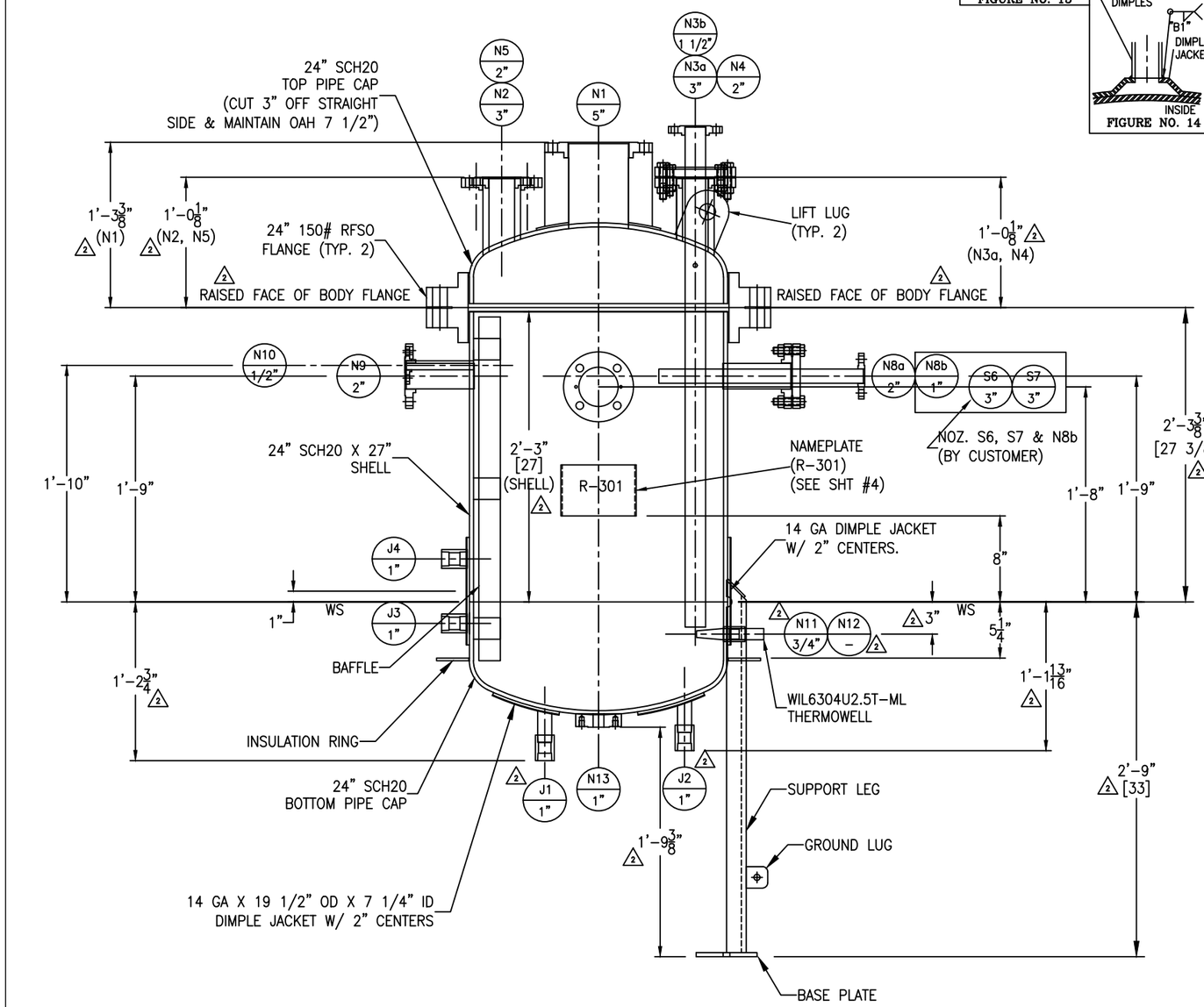

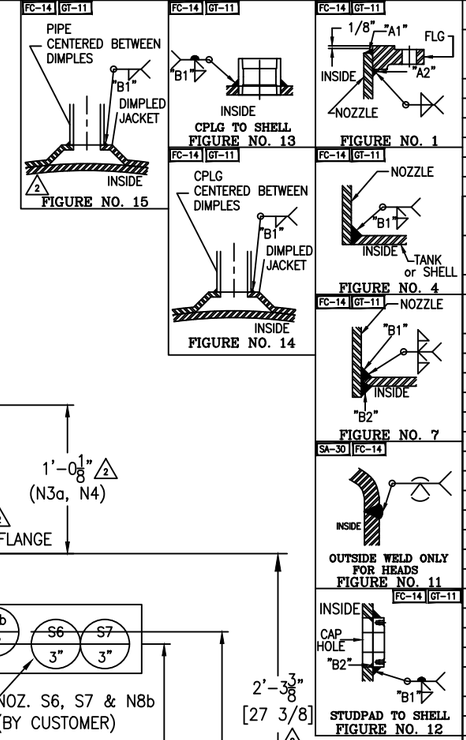

NOZZLE SCHEDULE

MARK	SERVICE	SIZE	RATING	TYPE / STYLE	NECK SCHED.	PROJECTION EXT. (E)	PROJECTION INT. (MIN.)	WELD FIGURE	REPAD SIZE (WIDTH X THK.)	WELD SIZE "A1"	"A2"	"B1"	"B2"	"C1"	"C2"
N1	AGITATOR MOUNT	5"	150#	RFSO	40S	SEE DWG	–	1,5	3" X 3/16"	1/4	3/8	3/16	–	3/16	3/16
N2	VENT LINE	3"	150#	RFSO	40S	SEE DWG	–	1,4	–	3/16	1/4	3/16	–	–	–
N3a	BASE NOZZLE FOR N3b	3"	150#	RFSO W/BLIND	40S	SEE DWG	–	1,4	–	1/4	5/16	1/4	–	–	–
N3b	FEED/RETURN LINE	1 1/2"	150#	RFSO	40S	SEE DWG	SEE DWG	1,7	–	3/16	1/4	3/16	1/8	–	–
N4	SPARE	2"	150#	RFSO W/BLIND	40S	SEE DWG	–	1,4	–	3/16	1/4	3/16	–	–	–
N5	LEVEL TRANSMITTER	2"	150#	RFSO	40S	SEE DWG	–	1,4	–	3/16	1/4	3/16	–	–	–
S6	SIGHT GLASS BY CUSTOMER	–	–	LJ STAR	–	–	–	12	–	–	–	3/8	1/8	–	–
S7	SIGHT GLASS BY CUSTOMER	–	–	LJ STAR	–	–	–	12	–	–	–	3/8	1/8	–	–
N8a	SPRAY NOZZLE BASE	2"	150#	RFSO W/BLIND	40S	6"	–	1,4	–	3/16	1/4	3/16	–	–	–
N8b	SPRAY NOZZLE BY CUSTOMER	1"	150#	RFSO	40S	SEE DWG	SEE DWG	1,7	–	3/16	1/4	3/16	1/8	–	–
N9	LEVEL SWITCH	2"	150#	RFSO	40S	6"	–	1,4	–	3/16	1/4	3/16	–	–	–
N10	NITROGEN INLET	1/2"	150#	RFSO	40S	6"	–	1,4	–	1/8	3/16	1/8	–	–	–
N11	SAMPLE VALVE	3/4"	3000#	FULL THRD. CPLG.	–	–	–	13	–	–	–	3/16	–	–	–
N12	THERMOWELL	–	–	WIL6304U2.5T-ML	–	–	–	7	–	–	–	3/16	1/8	–	–
N13	OUTLET VALVE	1"	150#	STUDPAD	–	–	–	12	–	–	–	3/8	1/8	–	–
J1	JKT INLET	1"	3000#	THRD. PIPE W/ CPLG	40S	SEE DWG	–	15	–	–	–	3/16	–	–	–
J2	JKT OUTLET	1"	3000#	THRD. PIPE W/ CPLG	40S	SEE DWG	–	15	–	–	–	3/16	–	–	–
J3	TOP JKT INLET	1"	3000#	FULL THRD. CPLG.	–	–	–	14	–	–	–	3/16	–	–	–
J4	TOP JKT OUTLET	1"	3000#	FULL THRD. CPLG.	–	–	–	14	–	–	–	3/16	–	–	–

MATERIALS OF CONSTRUCTION

	VESSEL
SHELL (PIPE SHELL)	SA312-304/304L WLD
HEADS (PIPE CAPS)	SA403-304/304L WPB
RIM ANGLE	–
NOZZLE NECKS	SA312-304/304L WLD
NOZZLE FLANGES	SA182F-304/304L
MANWAY NECKS	–
MANWAY FLANGES	–
GASKETS	VITON
BOLTS/STUDS	SA-193 B7 (ZINC PLATED)
NUTS	SA-194 2H (ZINC PLATED)
REPADS	SA240-304/304L
COUPLINGS	SA182F-304/304L
SUPPORTS/HOLD DOWNS	SA479-304/304L & SA240-304/304L
LIFTING LUGS	SA240-304/304L
VACUUM RINGS	–
INSULATION RINGS	SA240-304/304L
GROUND LUG	SA240-304/304L
BAFFLE/ BAFFLE SUPPORT	SA240-304/304L
LADDER	–
TANK CLIPS (LADDER)	–
HANDRAIL	–
HANDRAIL CLIPS	–
PLATFORM	–
PLATFORM CLIPS	–
DIPTUBE SUPPORT	–
JACKET SHELL	SA240-304/304L
JACKET HEADS	SA240-304/304L
JACKET NOZZLE NECKS	–
JACKET NOZZLE COUPLINGS	SA182F-304/304L

DESIGN DATA

	VESSEL
DESIGN AND FAB. CODE	ASME
CERT. STAMP REQ'D.	YES
DESIGN PRESSURE	125 PSIG/ FV
DESIGN TEMPERATURE	536° F
MIN. DESIGN METAL TEMP.	-20° F @ 125 PSIG
OPERATING PRESSURE	–
OPERATING TEMPERATURE	–
JOINT EFFICIENCY HEADS	0.70
JOINT EFFICIENCY SHELL	0.70
CORROSION ALLOWANCE	0"
SPECIFIC GRAVITY	1.0
EARTHQUAKE ZONE	Ss = (0.610) S1 = (0.180)
WIND LOAD	108 MPH
STRESS RELIEF	NOT REQ'D
RADIOGRAPHIC EXAM	NOT REQ'D
DYE PENETRANT EXAM	NOT REQ'D
MAGNETIC PARTICLE EXAM	NOT REQ'D
HYDROSTATIC TEST	189 PSIG / GAUGE #13
PNEUMATIC TEST	NOT REQ'D
JKT HYDRO TEST	130 PSIG / GAUGE #9
JKT DESIGN AND FAB. CODE	ASME
JKT CERT. STAMP REQ'D.	YES
JKT DESIGN PRESSURE	100 PSIG
JKT DESIGN TEMPERATURE	550° F
JKT MIN. DESIGN METAL TEMP.	-20° F @ 100 PSIG
JKT OPERATING PRESSURE	–
JKT OPERATING TEMPERATURE	–
JKT JOINT EFFICIENCY HEADS	0.70
JKT JOINT EFFICIENCY SHELL	0.70

VESSEL FINISH

INTERIOR WELD TREATMENT:	SAV TANK STANDARD
EXTERIOR WELD TREATMENT:	SAV TANK STANDARD
SAV TANK FINISHING STANDARD:	SEE NOTE 6
INSULATION:	3" BY OTHERS
PAINTING:	N/A

VESSEL CAPACITY AND WEIGHTS

OPERATING CAPACITY	–
FULL CAPACITY	70 GAL.
EMPTY SHIPPING WEIGHT	1,400 LBS.
WEIGHT FULL OF WATER	2,100 LBS.
WEIGHT FULL OF PRODUCT	2,100 LBS.

ASME SECT. VIII, DIV. 1
2023 EDITION

ENG. _____ DATE: _____
Q.C. _____ DATE: _____
A.I. _____ DATE: _____

This drawing is issued for customer approval. please review, make approval changes (if any) in red. check the appropriate box, sign & date.

- ☐ Approval – no changes. Please proceed with fabrication.
- ☐ Approved as noted. Please proceed with fabrication
- ☐ Not approved. Please make changes and resubmit.

Customer signature _____ Date _____

GENERAL NOTES

1.) COVER ALL FLANGES, OPENINGS & MACHINED SURFACES PRIOR TO SHIPMENT UNLESS OTHERWISE NOTED.
2.) BOLT HOLES TO STRADDLE 0° & 180° UNLESS OTHERWISE NOTED.
3.) REPADS TO HAVE (1) ø1/4" NPT TELL-TALE HOLES FOR PNEUMATIC TESTING AT 2 PSIG FOR PRESSURE RETAINING PARTS. ALL OTHER REPADS TO HAVE (1) ø1/4" WEEP HOLE AT LOWEST POINT ON PAD.
4.) ASME CODE VESSELS TO BE IN ACCORDANCE WITH UG-80 & UG-81. TOLERANCES: +/- 1/8" FOR DIMENSIONS AND +/- 2 DEGREES FOR ORIENTATIONS.
5.) ASME MATERIALS TO CONFORM TO THE FOLLOWING: FLANGES – B16.5, FITTINGS – B16.9 & COUPLINGS – B16.11.
6.) PICKLE ALL EXTERIOR WELDS. PASSIVATE INTERIOR & EXTERIOR OF VESSEL.
7.) BOTTOM CIRC. SEAM IS GRIND FLUSH FROM OUTSIDE FOR JACKET JUMPER.

REVISIONS

REV	D.BY	C.BY	DATE	DESCRIPTION
				AS BUILT
2	AD	RS	8/22/25	CERTIFIED
1	AD	RS	8/8/25	APPROVAL REV 1
0	AD	RS	7/18/25	APPROVAL

Savannah Tank & Equipment Corp.
1517 Telfair Road, Savannah, GA 31415
(912) 233-8902

DRAWN BY: AD
CHK'D BY: RS
APPROVED BY: NP
SCALE: 1 1/2" = 1'-0"

EPIC SYSTEMS GROUP, LLC.
DMN CSTR
EQUIP. # R-301
CUST. PO # 63958

DRAWING NO.: 077-25-1 SHT 1 OF 5 REV. SET 2

Ship loose items:
NONE

*NOTE: NOZ. S6, S7 & N8b TO BE SUPPLIED BY CUSTOMER

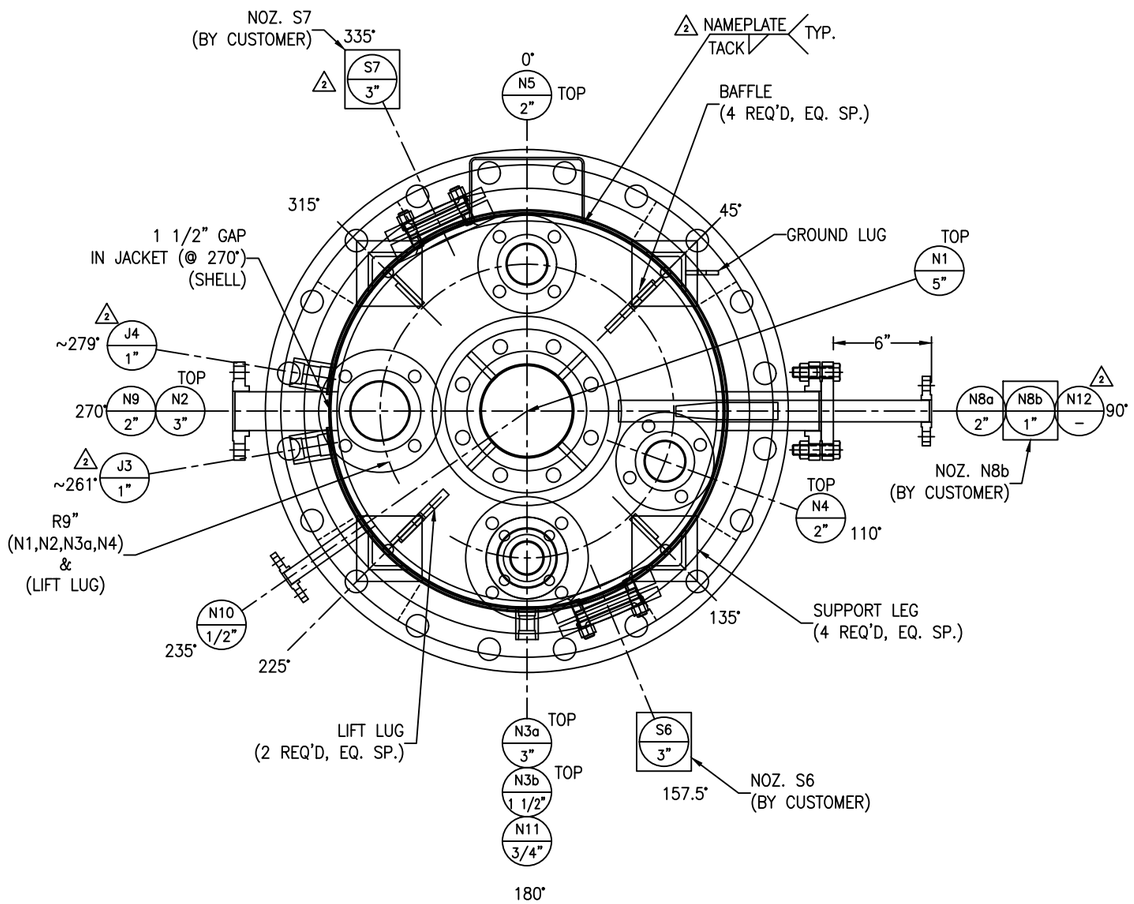

PLAN VIEW

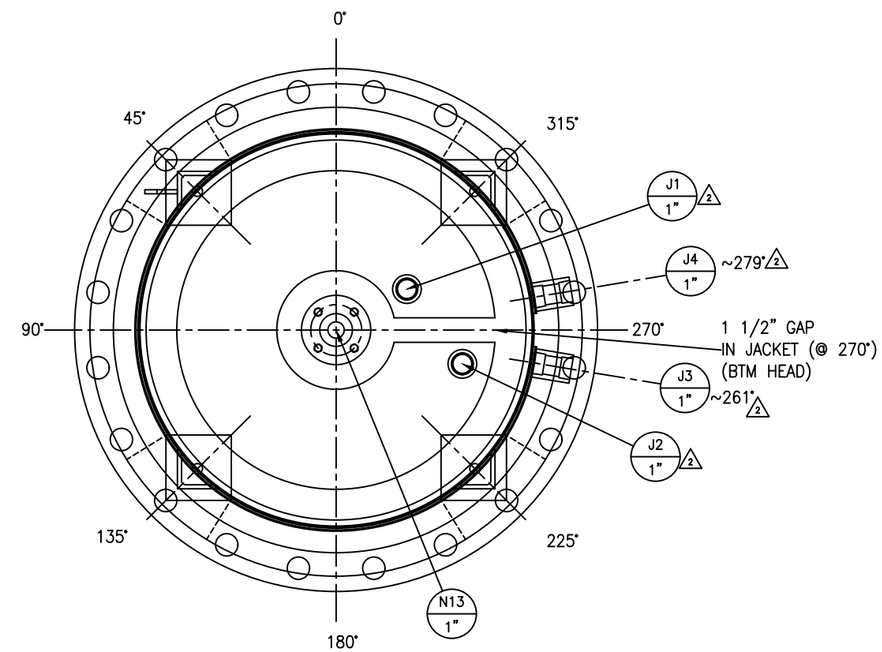

BOTTOM VIEW

Bolting for Body flange:

(20) 1 1/4"-7 NC x 7 1/2" FULL THREADED STUD
(40) 1 1/4"-7 NC HH NUT
(1) 24" 150# RING GASKET X 1/8" THK. (VITON)

NOTE: LOCATION FOR ALL JACKET NOZZLES/COUPLINGS ARE SHOWN FOR REFERENCE
NOZZLES/COUPLINGS WILL BE PUT ON THE CENTER OF THE JACKET PILLOW FOR PROPER FLOW OF MEDIUM. (SEE SHEET #5) 2

REV	D.BY	C.BY	DATE	DESCRIPTION
				AS BUILT
2	AD	RS	8/22/25	CERTIFIED
1	AD	RS	8/8/25	APPROVAL REV 1
0	AD	RS	7/18/25	APPROVAL

1 REVISIONS

Savannah Tank & Equipment Corp.
1517 Telfair Road, Savannah, GA 31415
(912) 233-8902

DRAWN BY: AD
CHK'D BY: RS
APPROVED BY: NP
SCALE: 2" = 1'-0"

EPIC SYSTEMS GROUP, LLC.
DMN CSTR
EQUIP. # R-301
CUST. PO # 63958

DRAWING NO.: 077-25-2 SHT 2 OF 5 REV. SET 2

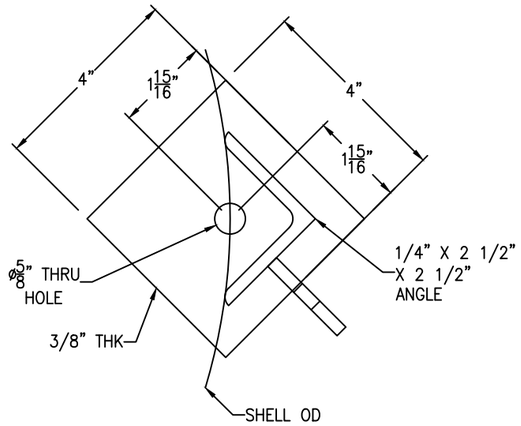

BASE PLATE DETAIL

(4 REQ'D) SCALE: 6" = 1'-0"

FC-14

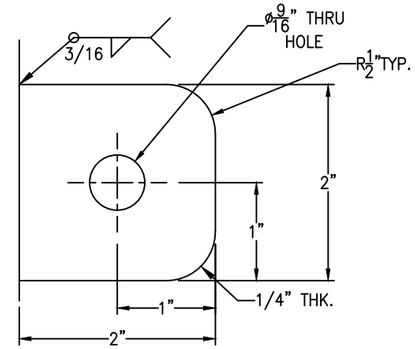

*GROUND LUG IS LOCATED @ 45°

GROUND LUG DETAIL

SCALE: 1'-0" = 1'-0"

FC-14

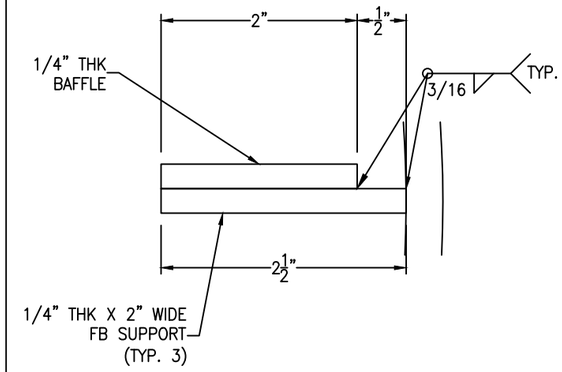

BAFFLE SUPPORT DETAIL

(4 REQ'D) SCALE: 1'-0" = 1'-0"

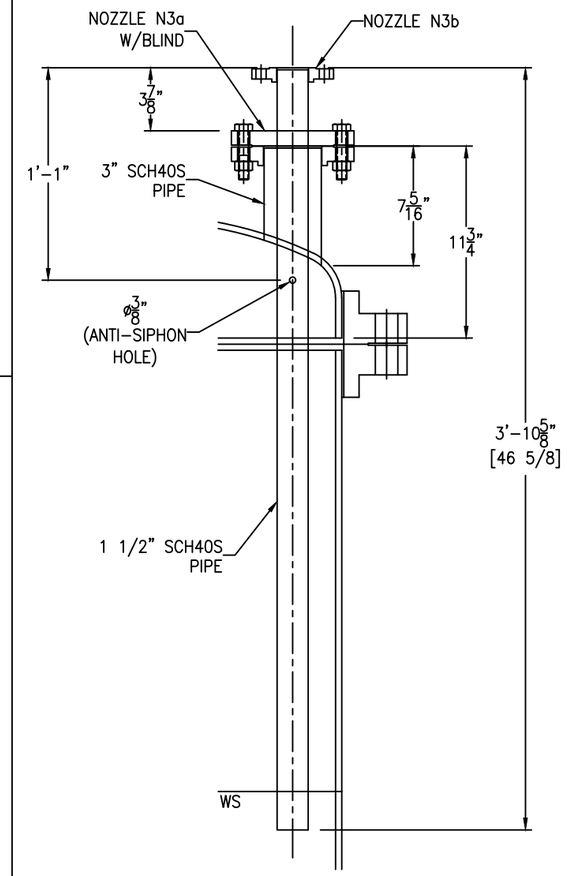

NOZZLE N3b AND N3a DETAIL

SCALE: 2" = 1'-0"

Bolting for blinds
N3a: (4) 5/8"-11 NC x 3" HH BOLT
(4) 5/8"-11 NC HH NUT
(1) 3" 150# RING GASKET X 1/8" THK (VITON)
N4: (4) 5/8"-11 NC x 2 1/2" HH BOLT
(4) 5/8"-11 NC HH NUT
(1) 2" 150# RING GASKET X 1/8" THK (VITON)
N8a: (4) 5/8"-11 NC x 2 1/2" HH BOLT
(4) 5/8"-11 NC HH NUT
(1) 2" 150# RING GASKET X 1/8" THK (VITON)

FC-14

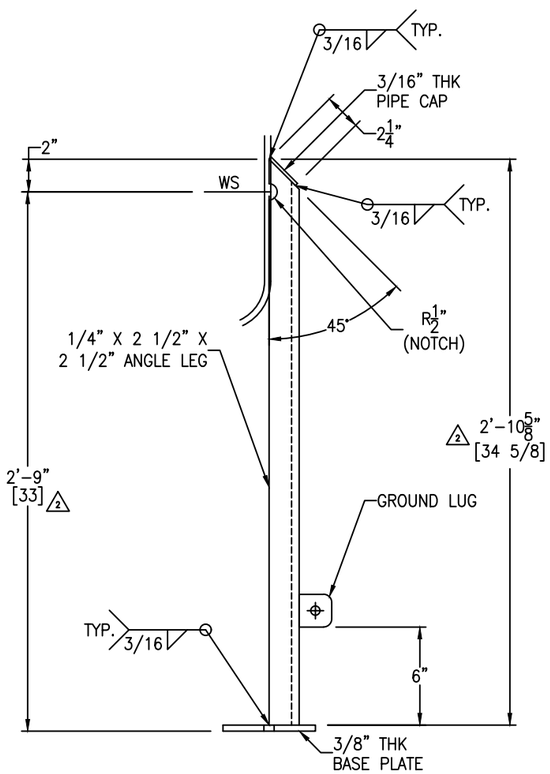

SUPPORT LEG DETAIL

(4 REQ'D) SCALE: 2" = 1'-0"

FC-14

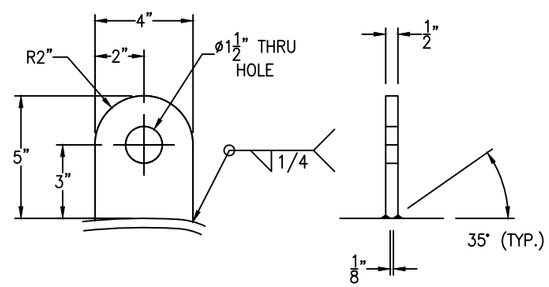

TANK WT. <= 5000#
SHACKLE PIN DIA. = 3/4"

LIFT LUG DETAIL

(2 REQ'D) SCALE: 3" = 1'-0"

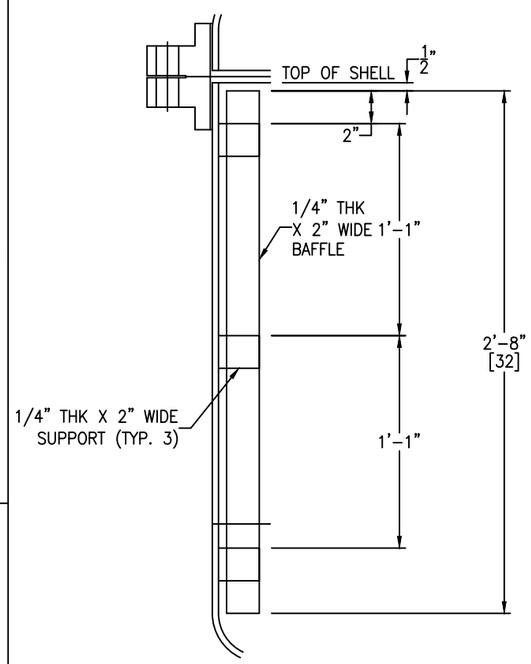

BAFFLE DETAIL

(4 REQ'D) SCALE: 2" = 1'-0"

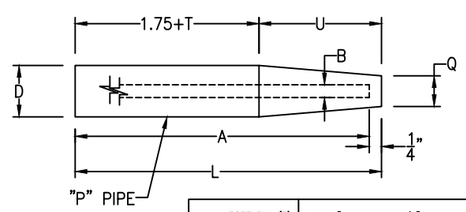

THERMOWELL PART NO:
WIL6304U2.5T-ML

BORE DIA. (B):	0.260" BORE, FOR 1/4" DIA ELEMENT
ELEMENT LENGTH (A):	6"
OVERALL LENGTH (L):	6.25"
INSERTION LENGTH (U):	2.5"
LAG (T):	2"
PROCESS (P):	3/4" PIPE (STD.) (OD = 1.050")
O.D (D):	1.050"
SHANK DIA (Q):	0.625"

THERMOWELL DETAIL

SCALE: 6" = 1'-0"

REV	D.BY	C.BY	DATE	DESCRIPTION
				AS BUILT
2	AD	RS	8/22/25	CERTIFIED
1	AD	RS	8/8/25	APPROVAL REV 1
0	AD	RS	7/18/25	APPROVAL

1 REVISIONS

Savannah Tank & Equipment Corp.
1517 Telfair Road, Savannah, GA 31415
(912) 233-8902

DRAWN BY: AD
CHK'D BY: RS
APPROVED BY: NP
SCALE: 1" = 1'-0"

EPIC SYSTEMS GROUP, LLC.
DMN CSTR
EQUIP. # R-301
CUST. PO # 63958

DRAWING NO.: 077-25-3 SHT 3 OF 5 REV. SET 2

FC-14

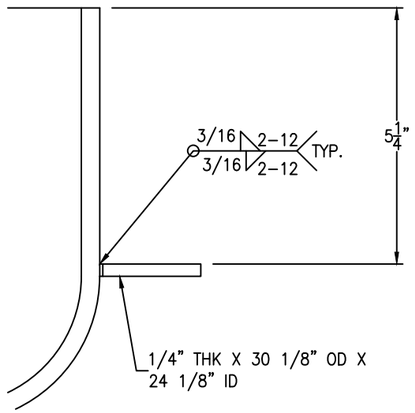

BOTTOM INSULATION RING DETAIL

SCALE: 6" = 1'-0"

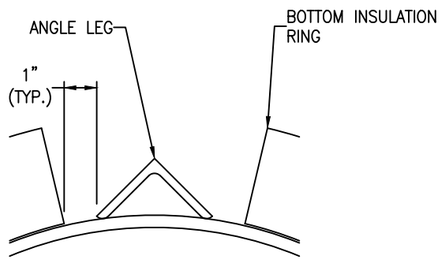

BOTTOM INSULATION RING CUTOUT DETAIL

(4 REQ'D) SCALE: 4" = 1'-0"

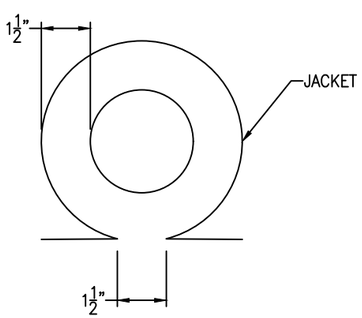

△2 NOZZLE N12 JACKET CUTOUT DETAIL

SCALE: 1'-0" = 1'-0"

FC-14

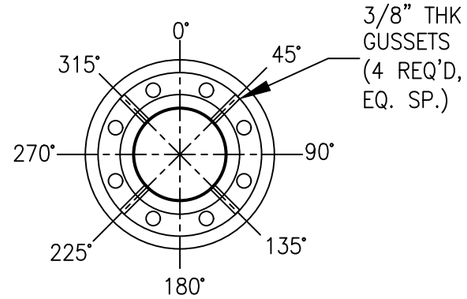

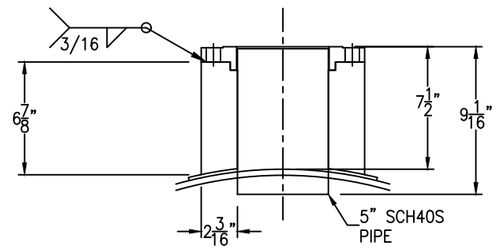

NOZZLE N1 DETAIL

SCALE: 2" = 1'-0"

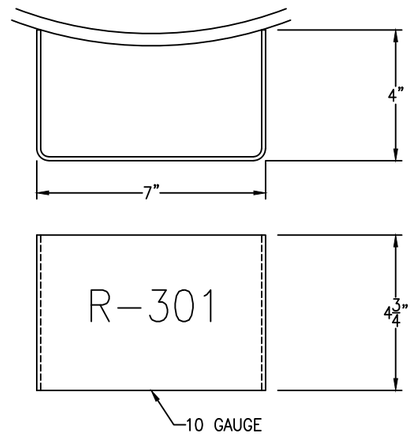

NAMEPLATE DETAIL

SCALE: 4" = 1'-0"

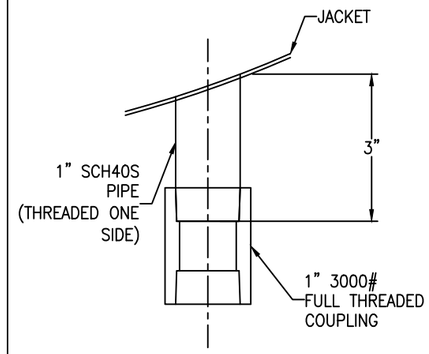

△2 NOZZLE J2 PIPE DETAIL

SCALE: 6" = 1'-0"

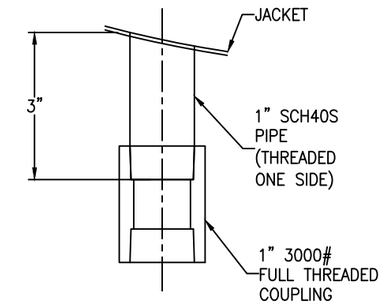

△2 NOZZLE J1 PIPE DETAIL

SCALE: 6" = 1'-0"

NOTE: LOCATION FOR ALL JACKET NOZZLES/COUPLINGS ARE SHOWN FOR REFERENCE
NOZZLES/COUPLINGS WILL BE PUT ON THE CENTER OF THE JACKET PILLOW FOR PROPER FLOW OF MEDIUM. (SEE SHEET #5) △2

REV	D.BY	C.BY	DATE	DESCRIPTION
				AS BUILT
2	AD	RS	8/22/25	CERTIFIED
1	AD	RS	8/8/25	APPROVAL REV 1
0	AD	RS	7/18/25	APPROVAL

△1 REVISIONS

Savannah Tank & Equipment Corp.
1517 Telfair Road, Savannah, GA 31415
(912) 233-8902

DRAWN BY: AD
CHK'D BY: RS
APPROVED BY: NP
SCALE: 1" = 1'-0"

EPIC SYSTEMS GROUP, LLC.
DMN CSTR
EQUIP. # R-301
CUST. PO # 63958

DRAWING NO.: 077-25-4 SHT 4 OF 5 REV. SET 2

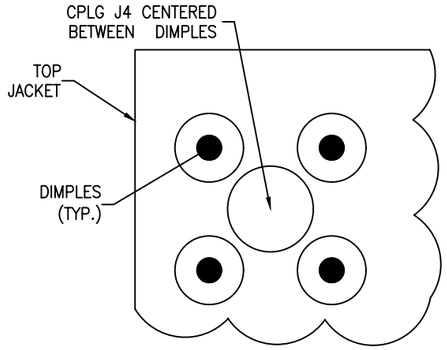

NOZ. J4 DETAIL

(1 REQ'D) SCALE: 6" = 1'-0"

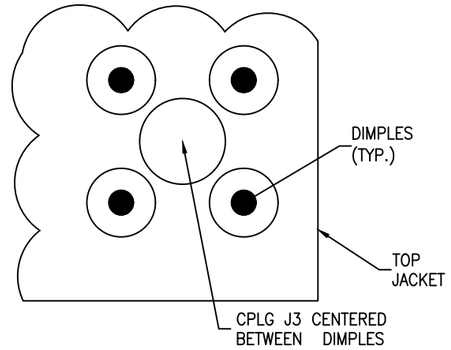

NOZ. J3 DETAIL

(1 REQ'D) SCALE: 6" = 1'-0"

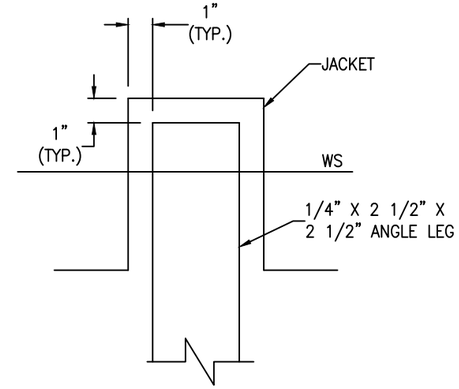

JKT CUT-OUT FOR SUPPORT LEG DETAIL

(3 REQ'D) SCALE: 3" = 1'-0"

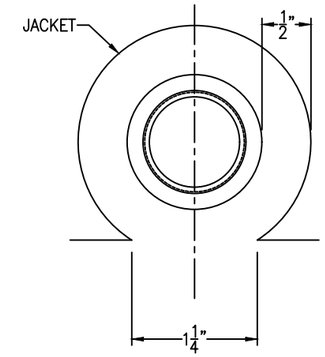

△2 NOZZLE N11, N12 JKT CUTOUT DETAIL

SCALE: 1'-0" = 1'-0"

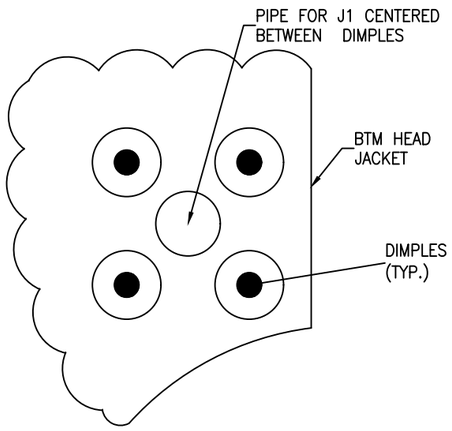

△2 NOZ. J1 DETAIL

(1 REQ'D) SCALE: 6" = 1'-0"

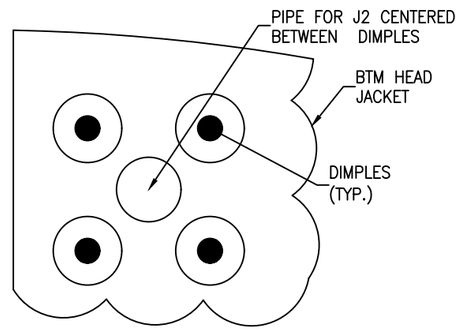

△2 NOZ. J2 DETAIL

(1 REQ'D) SCALE: 6" = 1'-0"

*BOTTOM CIRC. SEAM IS GRIND FLUSH FROM OUTSIDE FOR SHELL JACKET

NOTE: LOCATION FOR ALL JACKET NOZZLES/COUPLINGS ARE SHOWN FOR REFERENCE
NOZZLES/COUPLINGS WILL BE PUT ON THE CENTER OF THE JACKET PILLOW FOR PROPER FLOW OF MEDIUM. (SEE SHEET #5) △2

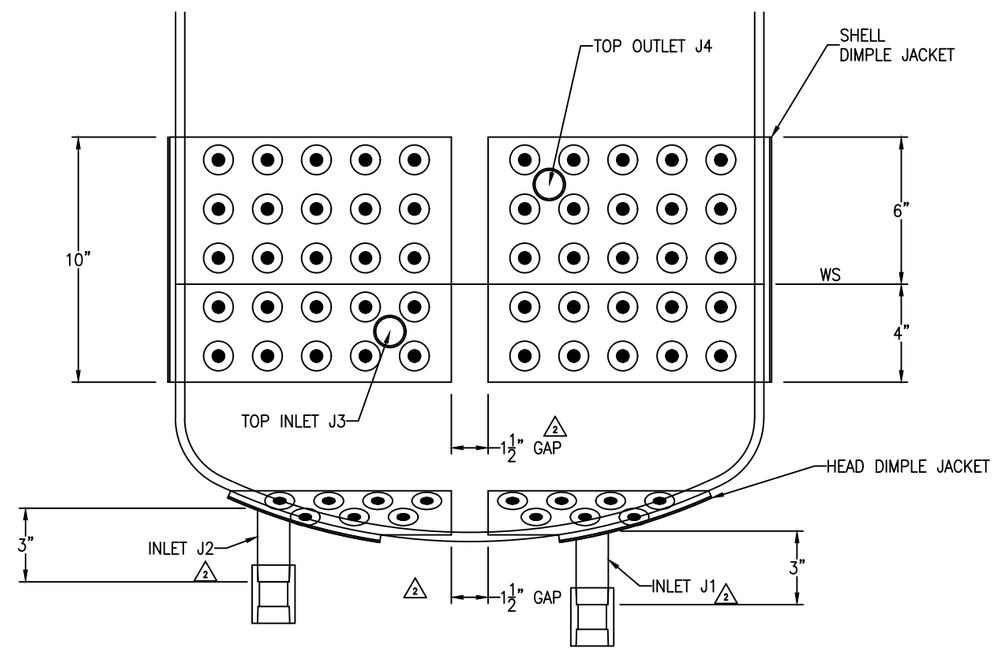

JACKET DETAIL

SCALE: 3" = 1'-0"

FC-14

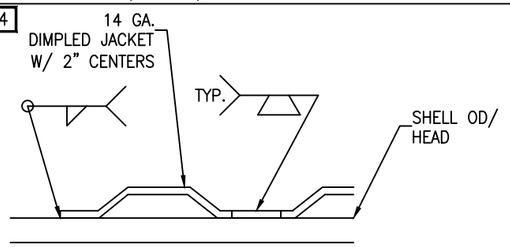

DIMPLE JKT TO SHELL/HEAD WELD DETAIL

SCALE: 1'-0" = 1'-0"

FC-14
GT-11

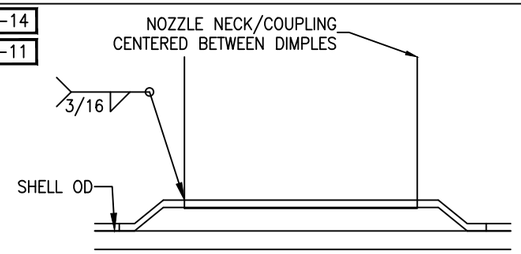

DIMPLE JKT NOZZLE/COUPLING DETAIL

SCALE: 1'-0" = 1'-0"

REV	D.BY	C.BY	DATE	DESCRIPTION
				AS BUILT
2	AD	RS	8/22/25	CERTIFIED
1	AD	RS	8/8/25	APPROVAL REV 1
0	AD	RS	7/18/25	APPROVAL

△1 REVISIONS

Savannah Tank & Equipment Corp.
1517 Telfair Road, Savannah, GA 31415
(912) 233-8902

DRAWN BY: AD
CHK'D BY: RS
APPROVED BY: NP
SCALE: 3/8" = 1'-0"

EPIC SYSTEMS GROUP, LLC.
DMN CSTR
EQUIP. # R-301
CUST. PO # 63958

DRAWING NO.: 077-25-5 SHT 5 OF 5 REV. SET 2